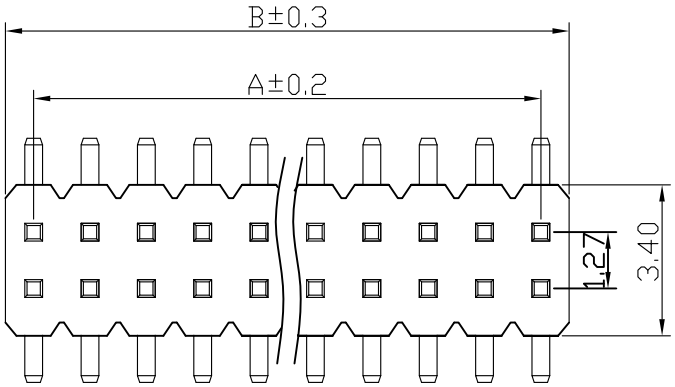

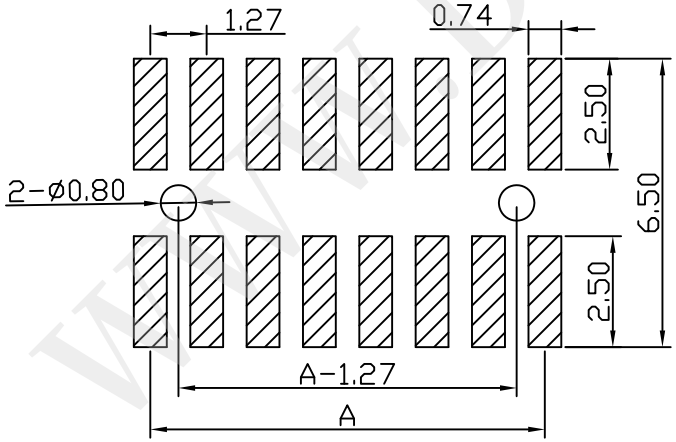

RECOMMEND P.C.B LAYOUT

PCB TOLERANCE:±0.05 (TOP VIEW)

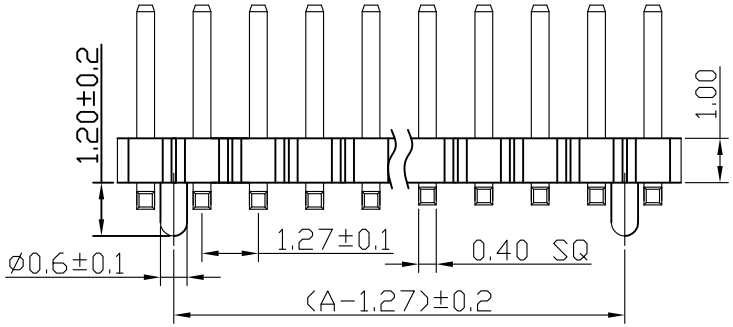

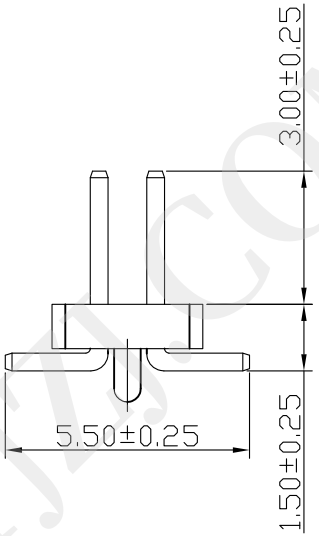

SPECIFICATIONS

Current Rating: 1.0 Amps
Withstanding Voltage: AC 500V
Insulation Resistance:1000MΩ Min
Contact Resistance: 20mΩ Max
Operation Temperature:-40° to+105°
Insrlator Material: Polyester(UL94V-0)
Contact Material: Brass
Standard: PA6T
Contact Plating: Gold Flash
Max.Processing Temp: 240° C for30-60seconds
(260° C for5seconds)

No.of	DIM.A	DIM.B	No. of	DIM.A	DIM.B	No. of	DIM.A	DIM.B	No. of	DIM.A	DIM.B	No. of	DIM.A	DIM.B
1	——	——	11	12.70	13.97	21	25.40	26.67	31	38.10	39.37	41	50.80	52.07
2	1.27	2.54	12	13.97	15.24	22	26.67	27.94	32	39.37	40.64	42	52.07	53.34
3	2.54	3.81	13	15.24	16.51	23	27.94	29.21	33	40.64	41.91	43	53.34	54.61
4	3.81	5.08	14	16.51	17.78	24	29.21	30.48	34	41.91	43.18	44	54.61	55.88
5	5.08	6.35	15	17.78	19.05	25	30.48	31.75	35	43.18	44.45	45	55.88	57.15
6	6.35	7.62	16	19.05	20.32	26	31.75	33.02	36	44.45	45.72	46	57.15	58.42
7	7.62	8.89	17	20.32	21.59	27	33.02	34.29	37	45.72	46.99	47	58.42	59.69
8	8.89	10.16	18	21.59	22.86	28	34.29	35.56	38	46.99	48.26	48	59.69	60.96
9	10.16	11.43	19	22.86	24.13	29	35.56	36.83	39	48.26	49.53	49	60.96	62.23
10	11.43	12.70	20	24.13	25.40	30	36.83	38.10	40	49.53	50.80	50	62.23	63.50

深圳市华宇创精密电子有限公司

TOLERANCE: X.X ±0.30, X.XX ±0.25, X.XXX ±0.15, X.° ±2°, X.X° ±0.5°	DRAWED BY: 陈一鸣	DATE: 2014-02-23	PART NAME: 1.27PH H1.0 2xnPin SMT 带柱 W3.4 PC5.5 PA3.0 PB1.5 L6.2
	CHECKED BY: 马跃	DATE: 2014-02-23	PART NO. HYC2-10M127-2XX-D-620
			MOLD NO.
UNIT: mm [inch]	APPROVED BY: 邱敏	DATE: 2014-02-23	DRAW NO: HYC-2507212139
SCALE:1:1 SIZE: A4			SHEET NO. 1 OF 1

WWW.DZYJZJ.COM